RoHS Compliant | Customer Drawing

REV.	ECN NO.	DESCRIPTION	DATE	DESIGN

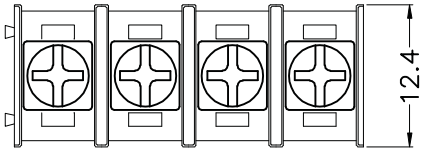

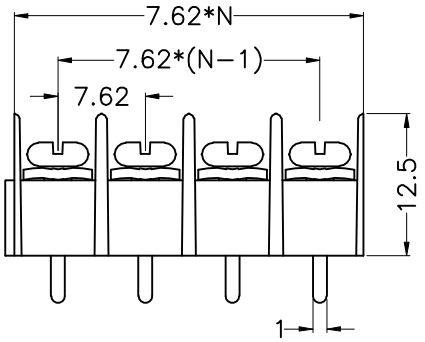

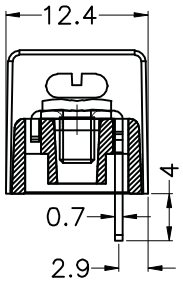

N=No.of contacts

·材质及电镀(Material)
塑件(Housing): PA66, UL94V-0
端子(Terminal):黄铜,0.7t 镀锡(Brass,Tin plated)
螺丝(Screw):M3,钢,镀镍(Steel, Ni-Plated)

·电气性能(Electrical)
额定电压(Rated Voltage): 300V
额定电流(Rated Current): 20A
绝缘电阻(Insulation Resistance): 500MΩ/DC500V
耐电压(Withstanding Voltage): AC2000V/Min

·机械性能(Mechanical)
温度范围(Temperature Range): -40℃～ +105℃
适用径(Wire Range): 22-14AWG
最大扭矩值(Max.Torque Value): 0.5N.m 4.4Lb.in

订购方式/HOW TO ORDER

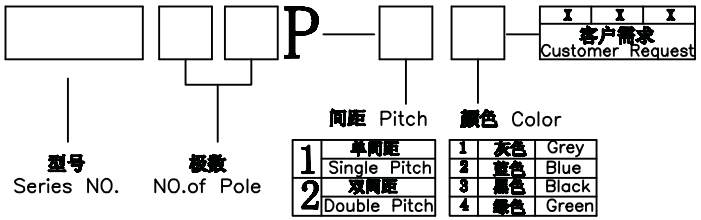

Contact Us

TEL:+86－574－63510149 FAX:+86－574－63516735
E-Mail:Sales@cxsuteng.com Website:www.cxsuteng.com

公差一览表 TOLERANCE UNLESS OTHERWISE			
X.	±0.25	X°.	±5°
.X	±0.20	.X°	±2°
.XX	±0.15	.XX°	±1°
.XXX	±0.02	.XXX°	±0.5°
日期 DATE		2012. 07. 10	

慈溪市速腾电子有限公司
CIXI SUTENG ELECTRONIC CO., LTD

单位 UNITS	mm	制图 DRAWING	No.01	产品名称 TITLE	ST7620—7.62
角法 VIEW		设计 DESIGN	No.06		
比例 SCALE	1:1	审核 CHKD		产品料号 PART NO.	ST7620—7.62
版本 VER	A0	核准 APPD		图号 DRAW NO.	ST7620—7.62